INSTRUCTION SHEET

8183A HYDRAULIC ROTATION (H64A-H76A-H84A)

INSTALLATION

1. Shut engine off and remove the ignition key.
2. **Figure 1:** Remove the two plugs from the "C1" and "C2" hydraulic block ports and replace them by two 90° 7/16" ORB M. X 7/16 JIC M. elbows (item 1) in the direction illustrated.
3. **Figure 3:** Install the 90° 9/16JICM X 7/8 ORBM elbows (item 1) in the motor ports by positioning the elbows down.
4. **Figure 3:** Connect hoses (items 2-3) to the hydraulic block 90° elbows and to the hydraulic motor as illustrated.
5. **Figure 3:** Attach hoses with the hose clamp (item 4), the 3/8" x 1 1/4" lg bolt (item 5) and the nylon insert locknut (item 6).
6. **Figure 2:** Remove the 10-24 X 7/8" allen socket head cap screws and the right plate of the hydraulic block. Make sure to remove the o-rings glued to the hydraulic block and clean well the four holes before valve installation. Attach the electro-hydraulic valve (item 1) to the block with the four allen socket head cap screws (item 2) provided with the valve, making sure the valve o-rings are well placed.

IMPORTANT: Make sure the valve is installed <u>in the right direction</u>. It must have the "T" indication toward the overpressure valves (fig. 2, item 3).

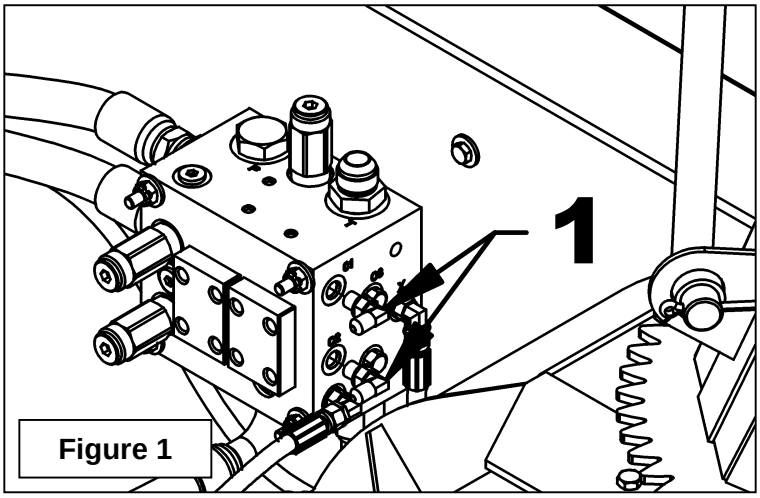

Figure 1

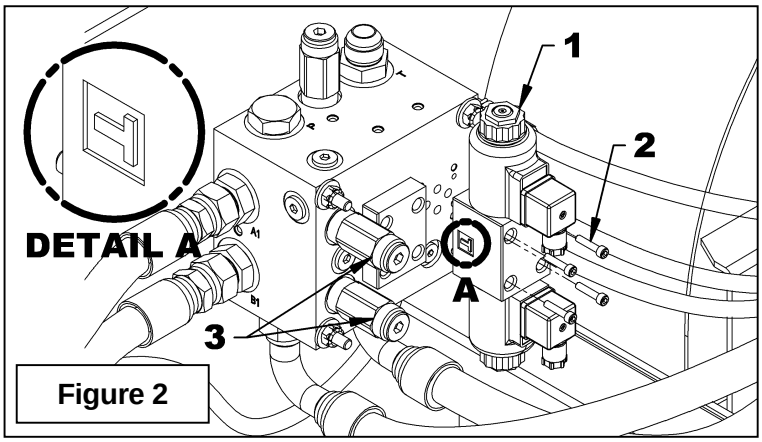

Figure 2

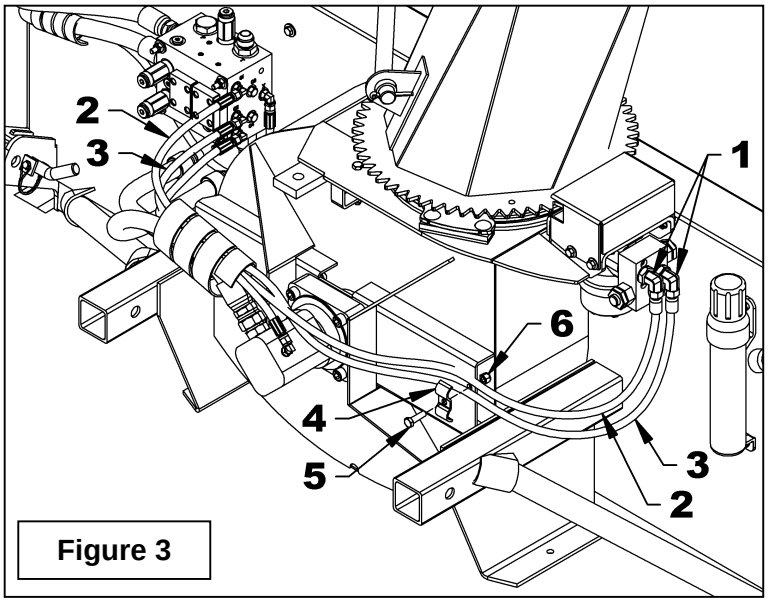

Figure 3

7. **Figure 4:** Remove the DIN connectors (item 1) by removing the two screws (item 2).
8. **Figures 5a-5b:** Disassemble the DIN connectors (fig. 5b, item 1) and connect the 160" harness wires as illustrated on Figure 5a. When connecting the wires, make sure to position the terminal board in the proper direction in the block so the wires point down once installed on the valve.
9. **Figure 4:** Reinstall the DIN connectors (items 3-4) on the valve making sure the white wire is in the upper connector and the blue wire is in the lower one and that the wires point down.
10. Install the switch in one of the holes of the switch box and install the switch box on the machine where it can be easily accessed when operating the snowblower with the hardware provided. If bolts are not long enough, use longer ones by making sure to not touch the switches.

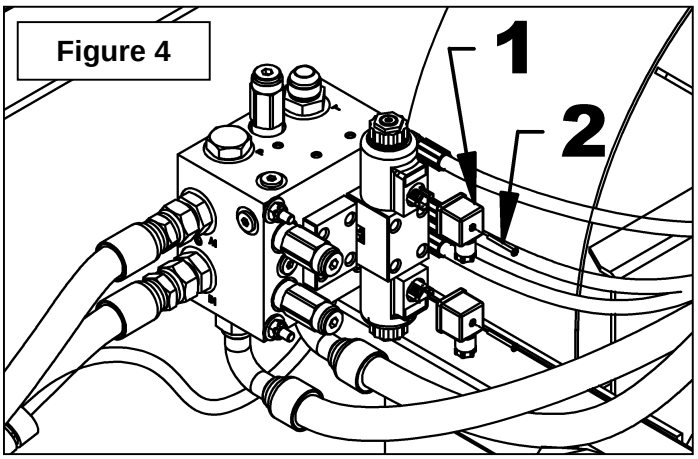

Figure 4

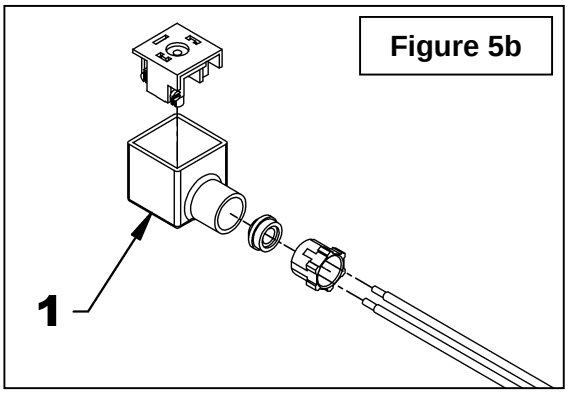

Figure 5b

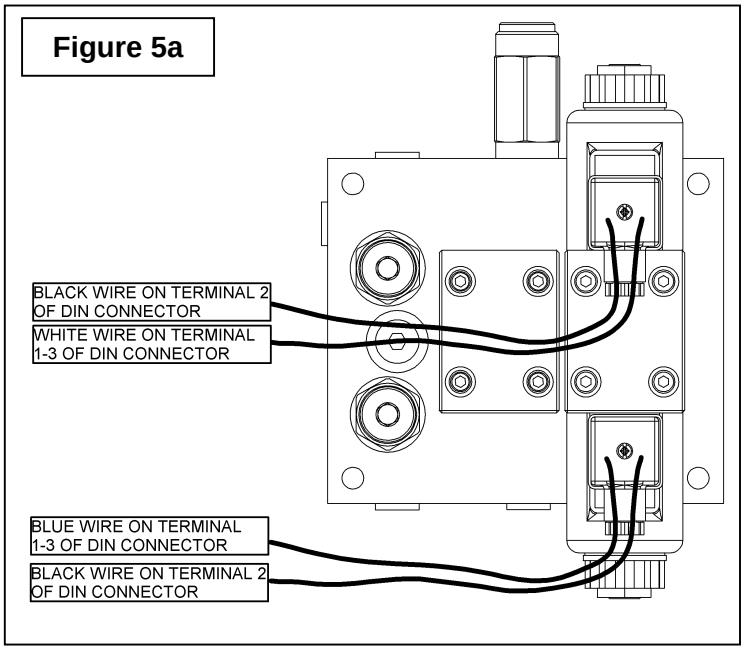

Figure 5a

11. Take the 160" harness to the same place than the hydraulic hoses to the front of the tractor, near the tractor starter. Attach the harness with the nylon tie wrap and insert with the hoses in the 4" hoses guard and then in the 360" loom. If it is a deflector reinstallation, connect the male connector of the 160" harness to the tractor female connector.

12. Figure 6 : Install the male terminals on the stripped end of the white wires and the black ground wire. Connect those terminals to the three cavity female connector making sure to install the black wire in the "A" cavity.

13. Attach the black wire to an appropriate ground on the tractor frame.

14. Connect the fuse wire to the tractor contact switch wire with the connector tap.

15. Connect the male connector to the female connector.

16. Figure 7: Connect the <u>fuse wire to the 1 blade (item 1) - in the center</u>, one white wire to the item 2 blade and the other to the item 3 blade of the switch.

<u>**NOTE**</u>: If the deflector movement is not corresponding to the switch illustration, reverse the white wires.

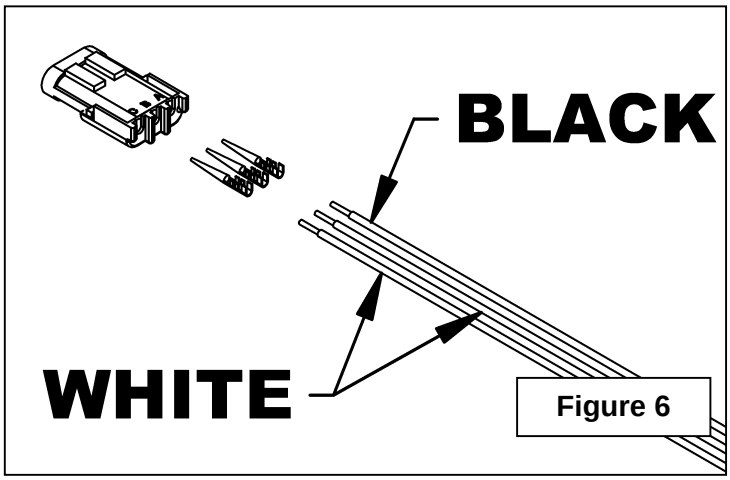

Figure 6

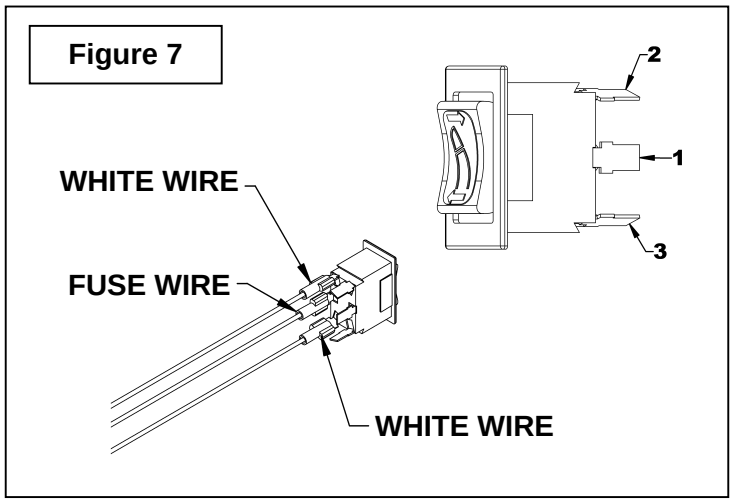

Figure 7

INSTRUCTION SHEET

8183A HYDRAULIC ROTATION (H64A-H76A-H84A)

PARTS
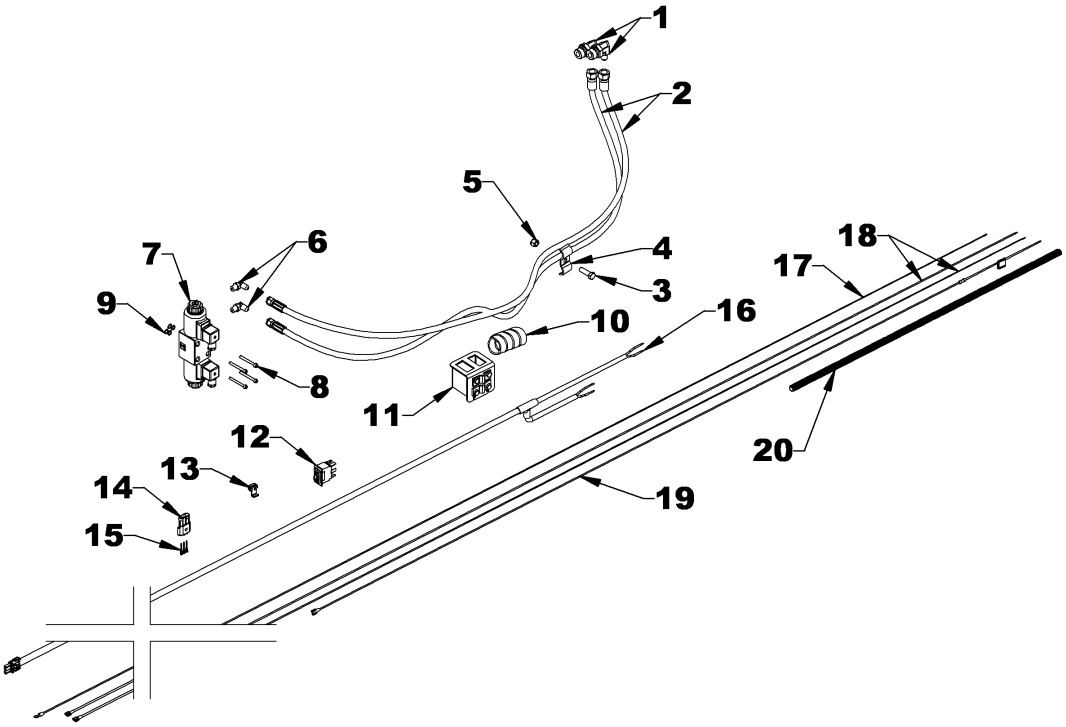
REF.	DESCRIPTION	QTY	PART
1	Elbow 90° 7/8" ORBM x 9/16 X 18 JICM	2	2600106
2	Hose 59" lg – 9/16" JIC SWF x 7/16" JIC SWF	2	3700165
3	Bolt hex. ø3/8"NC x 1 1/4" Gr.5 PTD	1	0100039
4	Hose clamp 1/4"	1	666583
5	Nylon insert locknut ø3/8"NC PTD	1	1000006
6	Elbow 90º 7/16 ORB M X 7/16 JIC M	2	2600065
7	Electro-hydraulic valve	1	3900027
8	Allen socket head cap screw 10-24 NC x 1 3/4" gr.5, black	4	0800018
9	O-ring 0.07" x 3/8" x 1/2" ext.	4	3900462
10	Hose guard 4" lg.	1	669152
11	Switch box	1	669281
12	Switch with rotation decal	1	669255
13	Connector tap	1	656665
14	Female connector three cavity	1	4000066
15	Male terminal	3	663282
16	Electric harness 160"	1	4000078
17	Negative wire (black) 200"	1	669314
18	Positive wire (white) 200"	2	669313
19	Wire with fuse	1	666065
20	Loom 3/8" x 360"	1	669315